REVISIONS				
ZONE	REV	DESCIPTION	DATE	APPROVAL
	A	PC LAYOUT	10/86	SEJB
	A1	FIRST RELEASE	11/86	SEJB

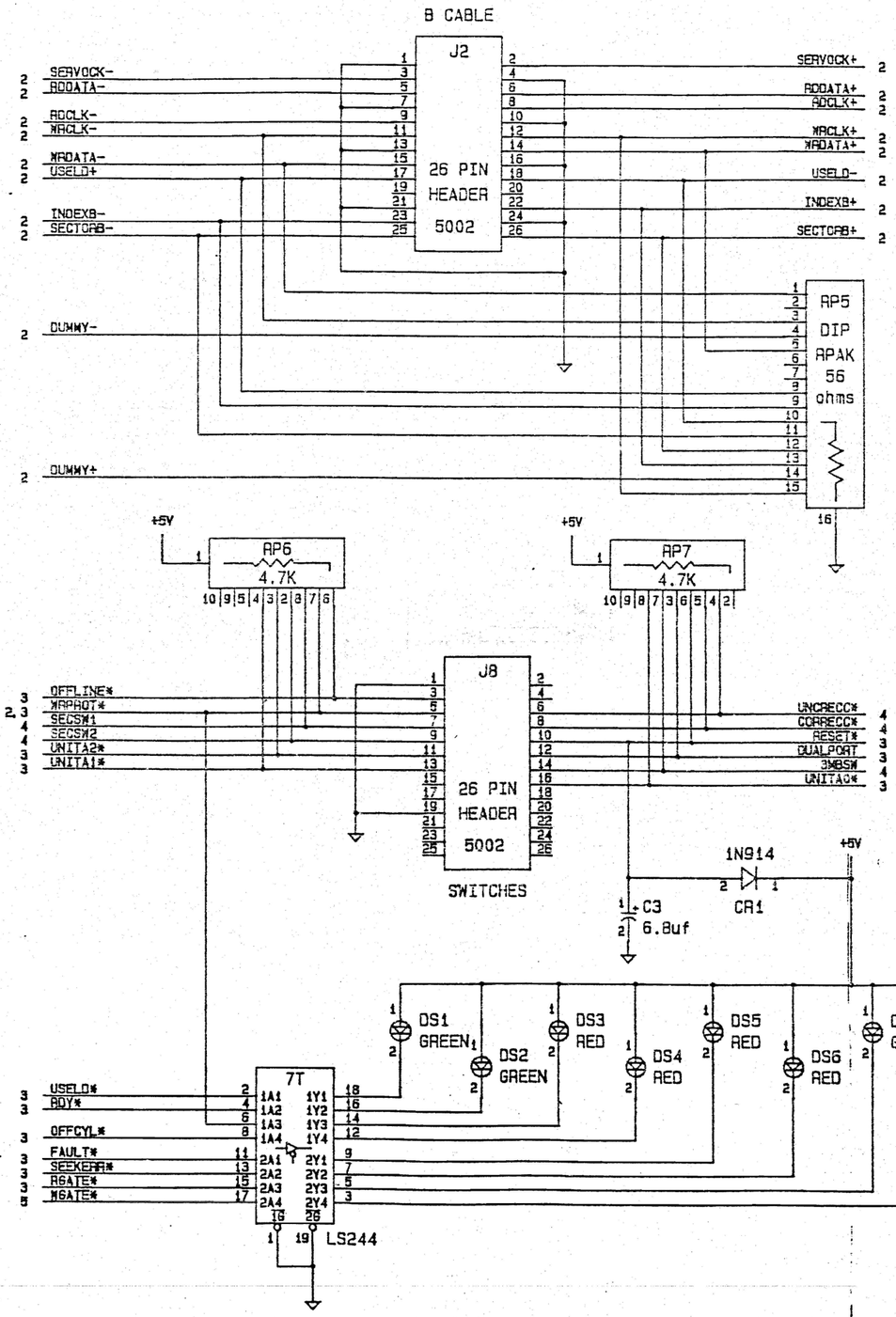

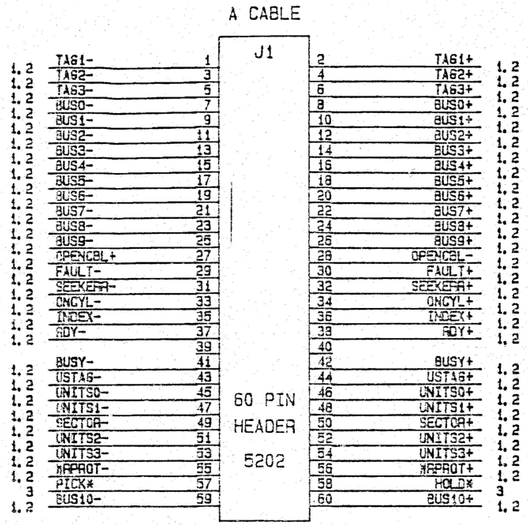

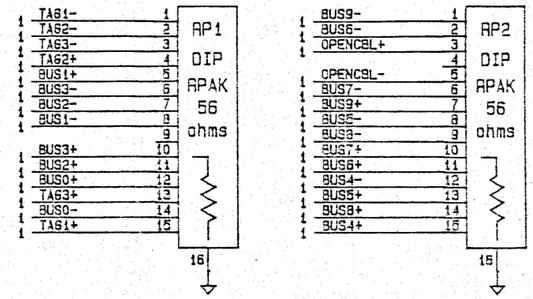

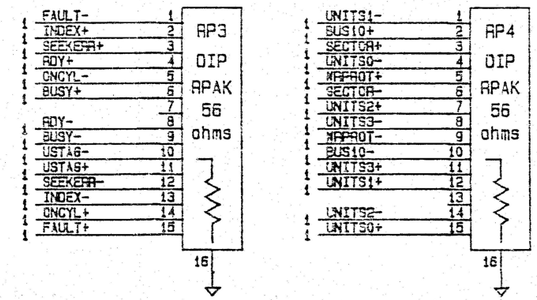

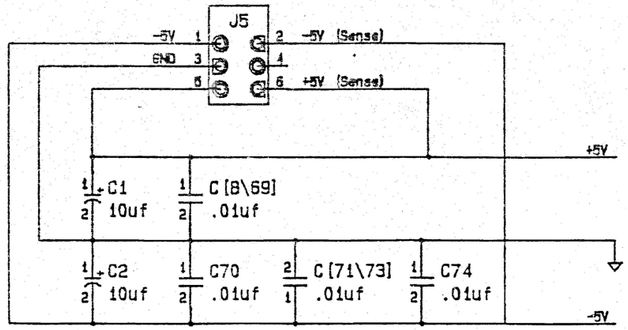

DO NOT SCALE THIS DRAWING		SPECTRA LOGIC	
SIGNATURES	DATE	TITLE S03 DISK & TAPE EMULATOR	
DRAWN BY:			
CHECKED BY:		DRAWING NO. 6200071	
APPROVED BY:		REV A	SHEET 1 OF 10

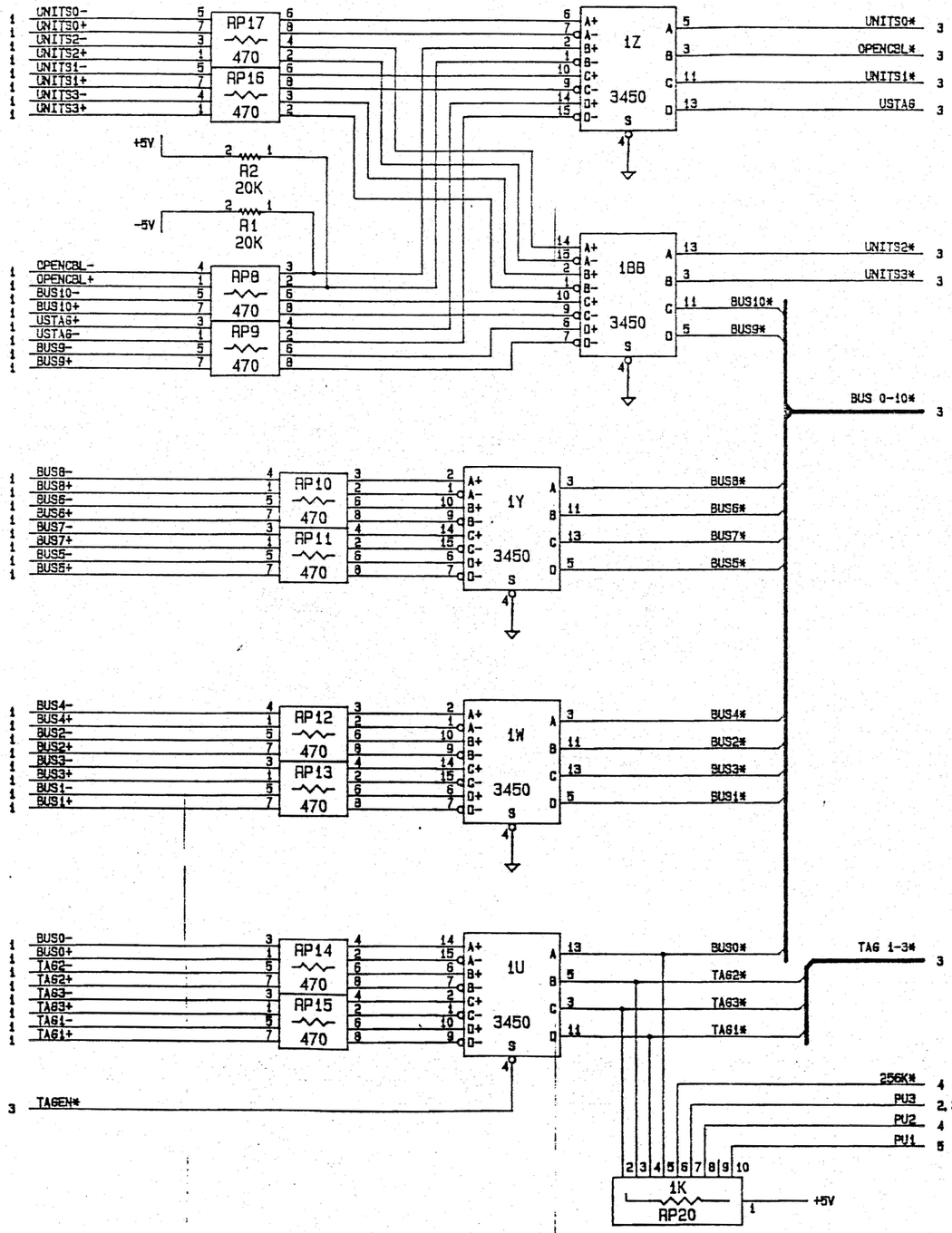

SPECTRA LOGIC

TITLE	S03	DISK & TAPE EMULATOR
DRAWING NO.	6200071	
REV A	SHEET 2	OF 10

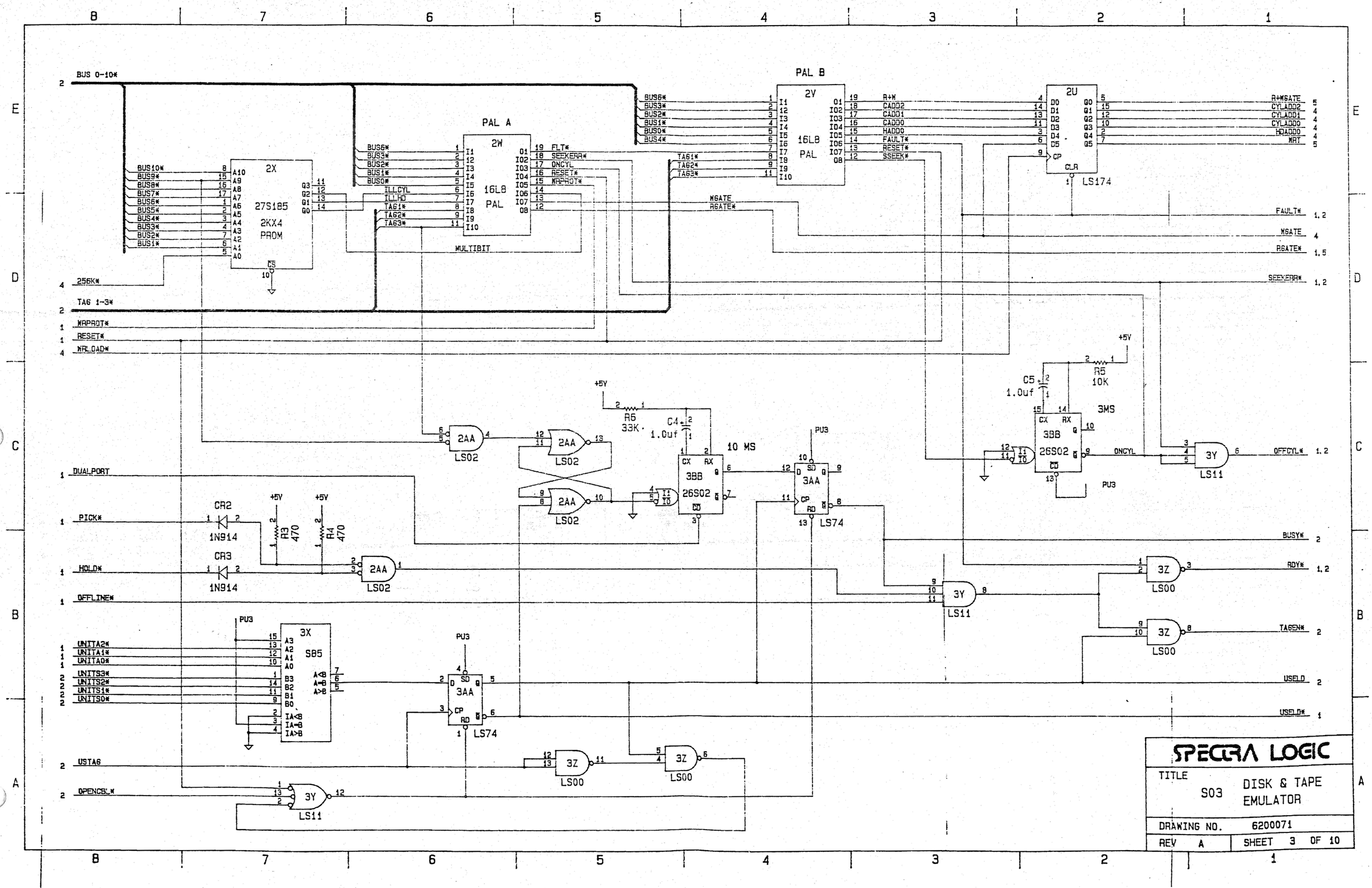

BUS 0-10*
PAL B
2V
16L8
PAL
2U
LS174
PAL A
2W
16L8
PAL
2X
27S185
2KX4
PROM
256K*
TAG 1-3*
WRPROT*
RESET*
WRLOAD*
MULTIBIT
R+WGATE
CYLADD2
CYLADD1
CYLADD0
HDADD0
WRT
FAULT*
WGATE
RGATE*
SEEKERR*
+5V
R5
10K
C5
1.0uf
3MS
3BB
26S02
ONCYL
3Y
LS11
OFFCYL*
R6
33K
C4
1.0uf
10 MS
PU3
3AA
LS74
2AA
LS02
DUALPORT
PICK*
CR2
1N914
R3
470
R4
470
CR3
HOLD*
OFFLINE*
BUSY*
RDY*
3Z
LS00
TAGEN*
3X
S85
UNITA2*
UNITA1*
UNITA0*
UNITS3*
UNITS2*
UNITS1*
UNITS0*
USELD
USELD*
USTAG
OPENCBL*
SPECTRA LOGIC
TITLE
S03
DISK & TAPE
EMULATOR
DRAWING NO.
6200071
REV
A
SHEET
3
OF
10

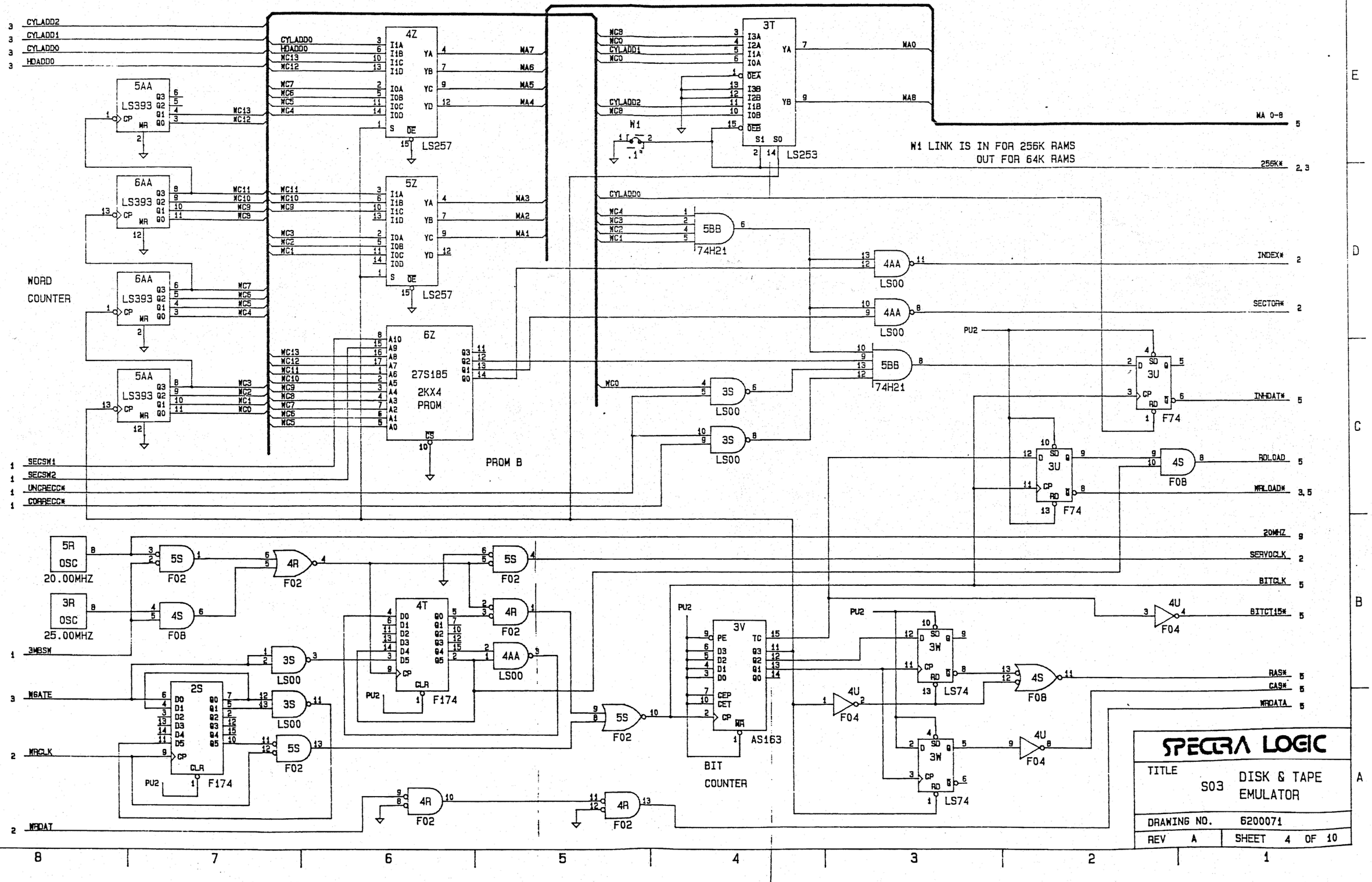
WORD COUNTER
CYLADD2
CYLADD1
CYLADD0
HDADD0
SECSW1
SECSW2
UNCRECC*
CORRECC*
3WBSW
WGATE
WRCLK
WRDAT
W1 LINK IS IN FOR 256K RAMS
OUT FOR 64K RAMS
PROM B
BIT COUNTER
MA 0-8
256K*
INDEX*
SECTOR*
INHDAT*
RDLOAD
WRLOAD*
20MHZ
SERVOCLK
BITCLK
BITCT15*
RAS*
CAS*
WRDATA
20.00MHZ
25.00MHZ
SPECTRA LOGIC
TITLE
S03 DISK & TAPE EMULATOR
DRAWING NO. 6200071
REV A
SHEET 4 OF 10

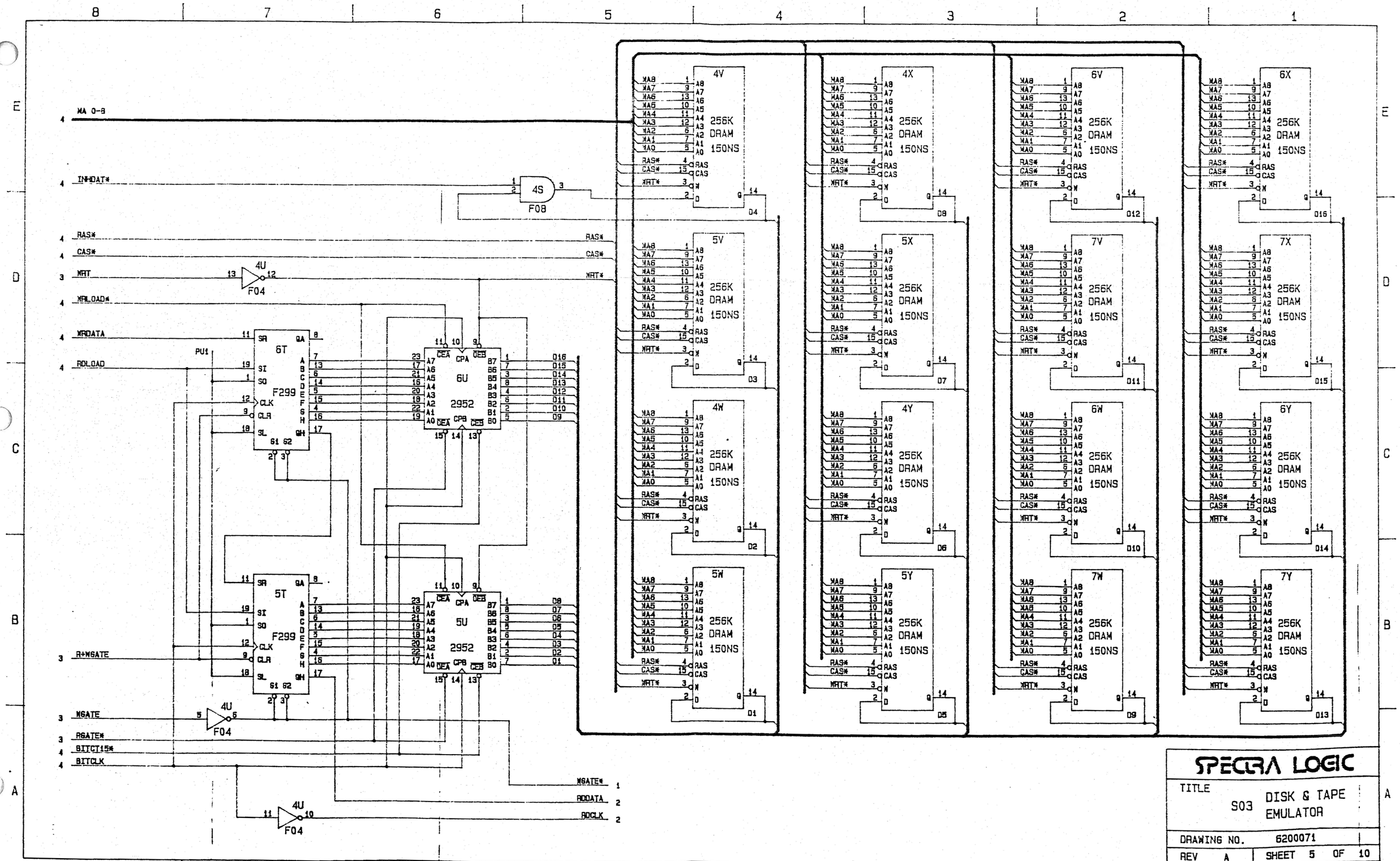

SPECTRA LOGIC

TITLE S03 DISK & TAPE EMULATOR

DRAWING NO. 6200071

REV A SHEET 5 OF 10

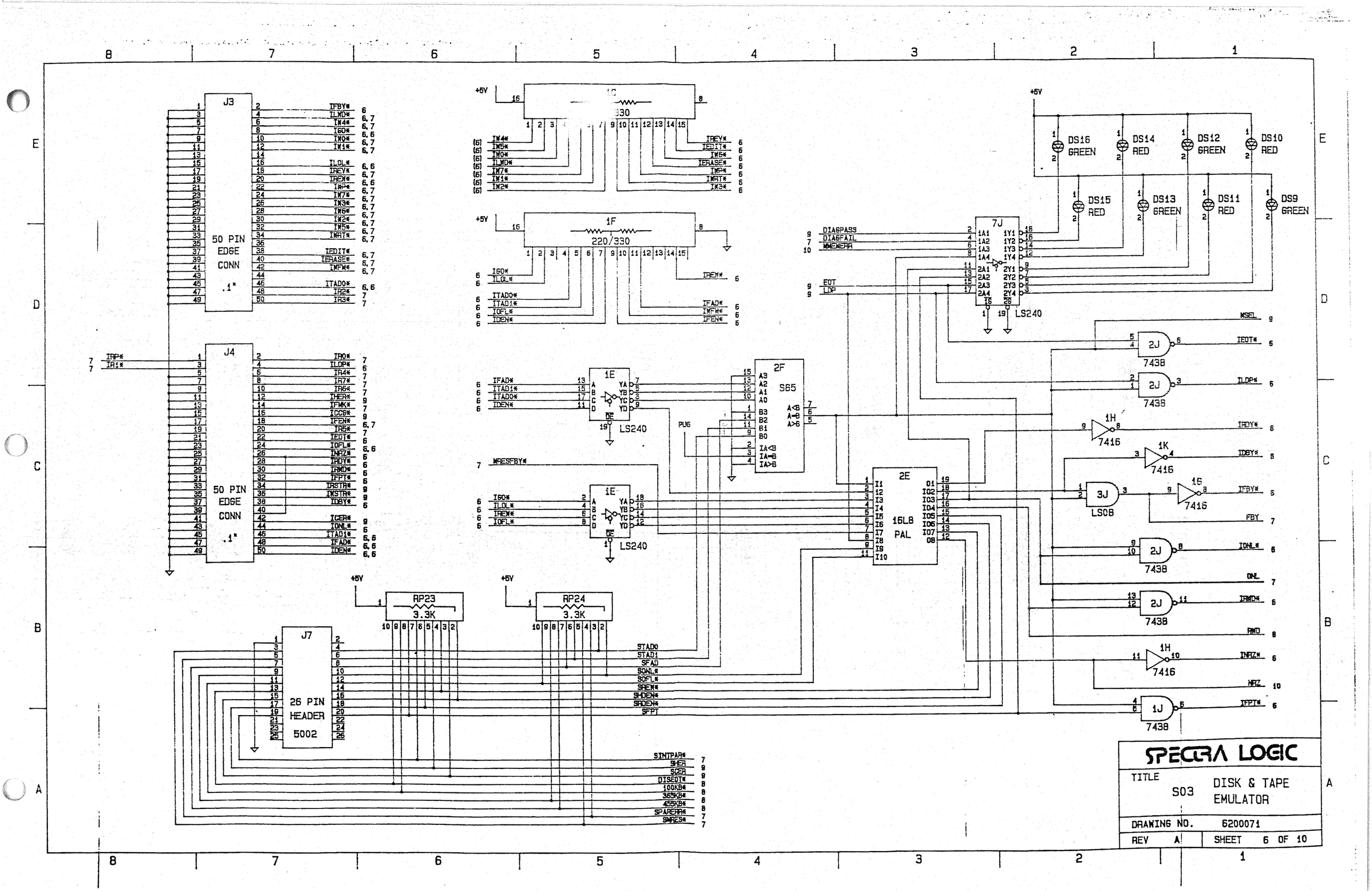
J3
50 PIN EDGE CONN .1"
J4
50 PIN EDGE CONN .1"
J7
26 PIN HEADER 5002
1C 330
1F 220/330
1E LS240
2F S65
2E 16L8 PAL
7J LS240
RP23 3.3K
RP24 3.3K
PU6
DS16 GREEN
DS14 RED
DS12 GREEN
DS10 RED
DS15 RED
DS13 GREEN
DS11 RED
DS9 GREEN
2J 7438
1H 7416
1K 7416
3J LS08
1J 7438
SPECTRA LOGIC
TITLE S03 DISK & TAPE EMULATOR
DRAWING NO. 6200071
REV A
SHEET 6 OF 10

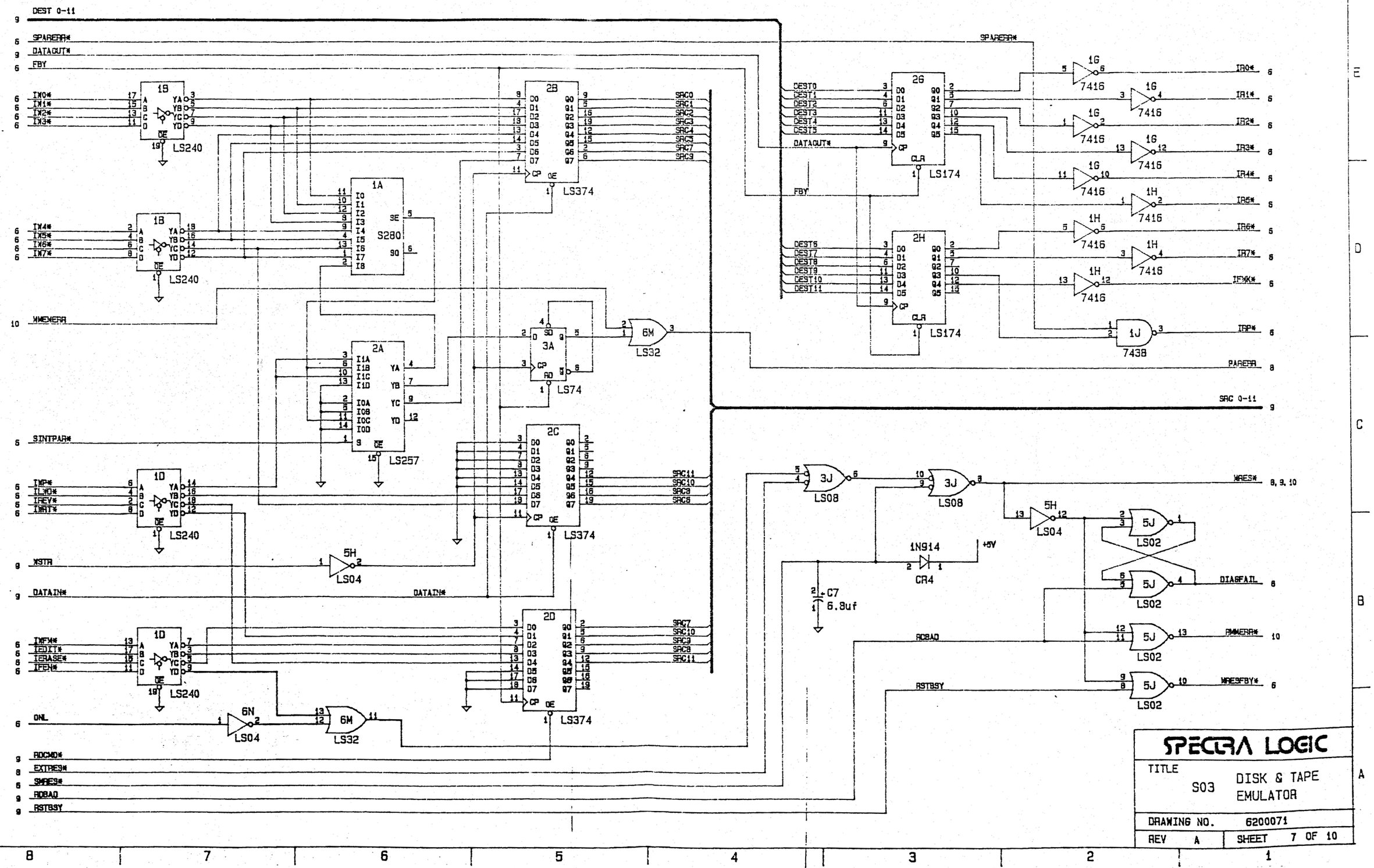

SPECTRA LOGIC

TITLE	S03 DISK & TAPE EMULATOR
DRAWING NO.	6200071
REV A	SHEET 7 OF 10

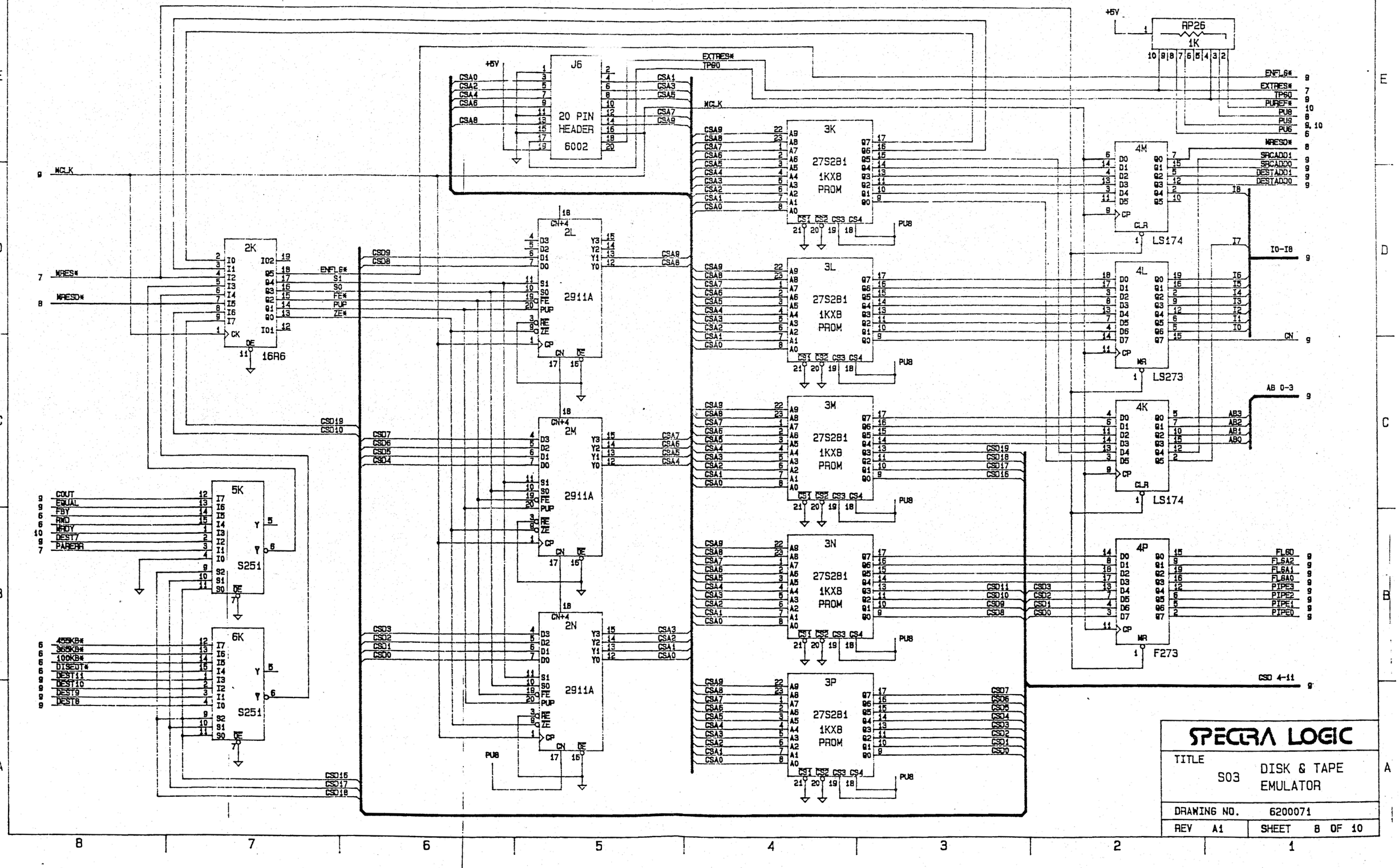

SPECTRA LOGIC	
TITLE	S03 DISK & TAPE EMULATOR
DRAWING NO.	6200071
REV A1	SHEET 8 OF 10

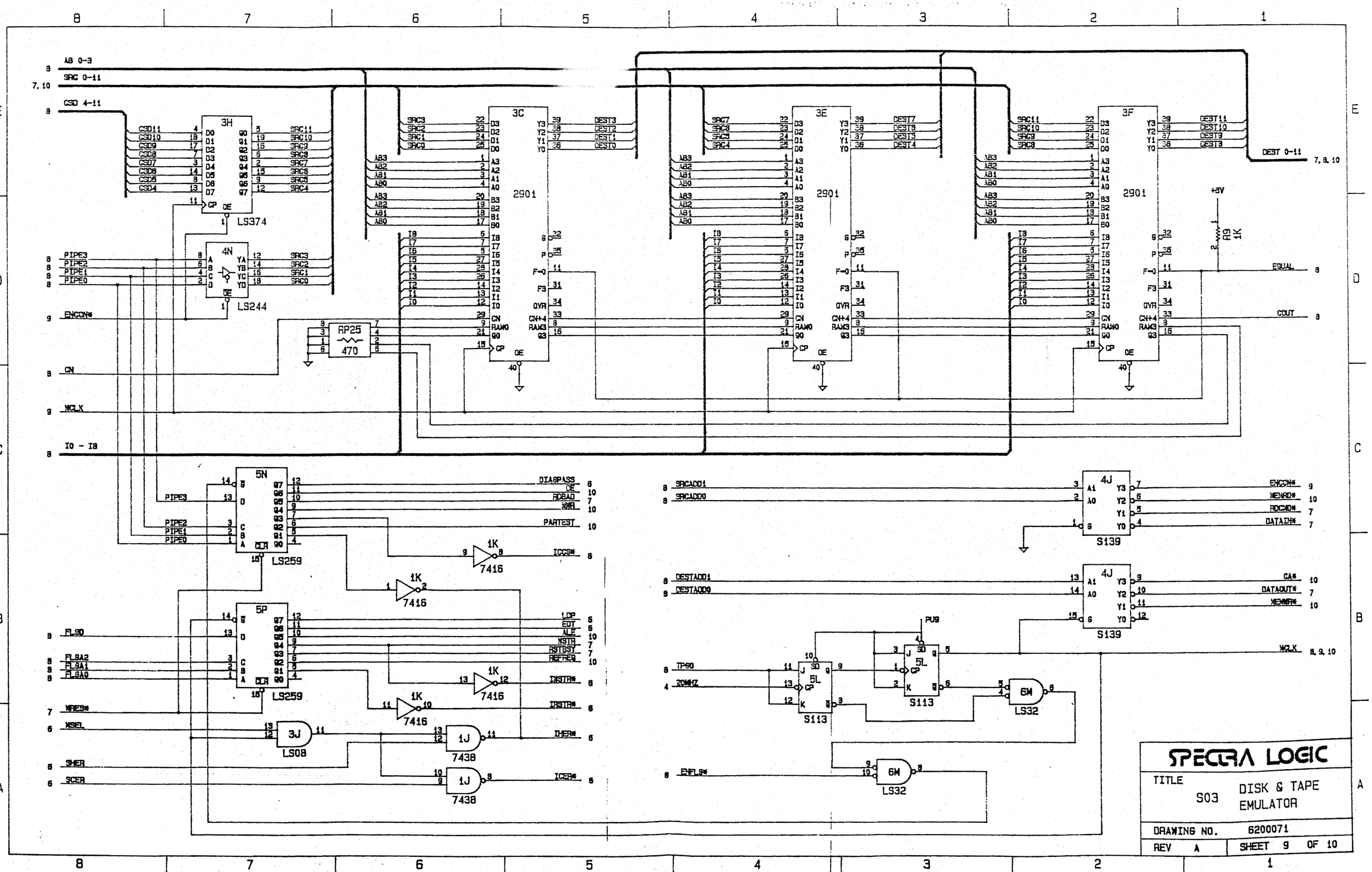
AB 0-3
SRC 0-11
CSD 4-11
3H
LS374
4N
LS244
3C
3E
3F
2901
RP25
470
+5V
R9
1K
EQUAL
COUT
DEST 0-11
7,8,10
PIPE3
PIPE2
PIPE1
PIPE0
ENCON#
CN
MCLK
IO - I8
5N
LS259
5P
LS259
7416
1K
3J
LS08
1J
7438
DIAGPASS
DE
RDBAD
WWR
PARTEST
ICCS#
LDP
EOT
ALE
MSTR
RSTDSY
REFREQ
INSTR#
IRSTR#
IMER#
ICER#
FL90
FLSA2
FLSA1
FLSA0
MREQ#
MSEL
SMER
SCER
4J
S139
SRCADD1
SRCADD0
DESTADD1
DESTADD0
ENCON#
MEMRD#
RDCMD#
DATAIN#
CA#
DATAOUT#
MEMWR#
WCLK
8, 9, 10
5L
S113
PU9
TP90
20MHZ
6M
LS32
ENFLS#
SPECTRA LOGIC
TITLE
S03 DISK & TAPE EMULATOR
DRAWING NO. 6200071
REV A
SHEET 9 OF 10

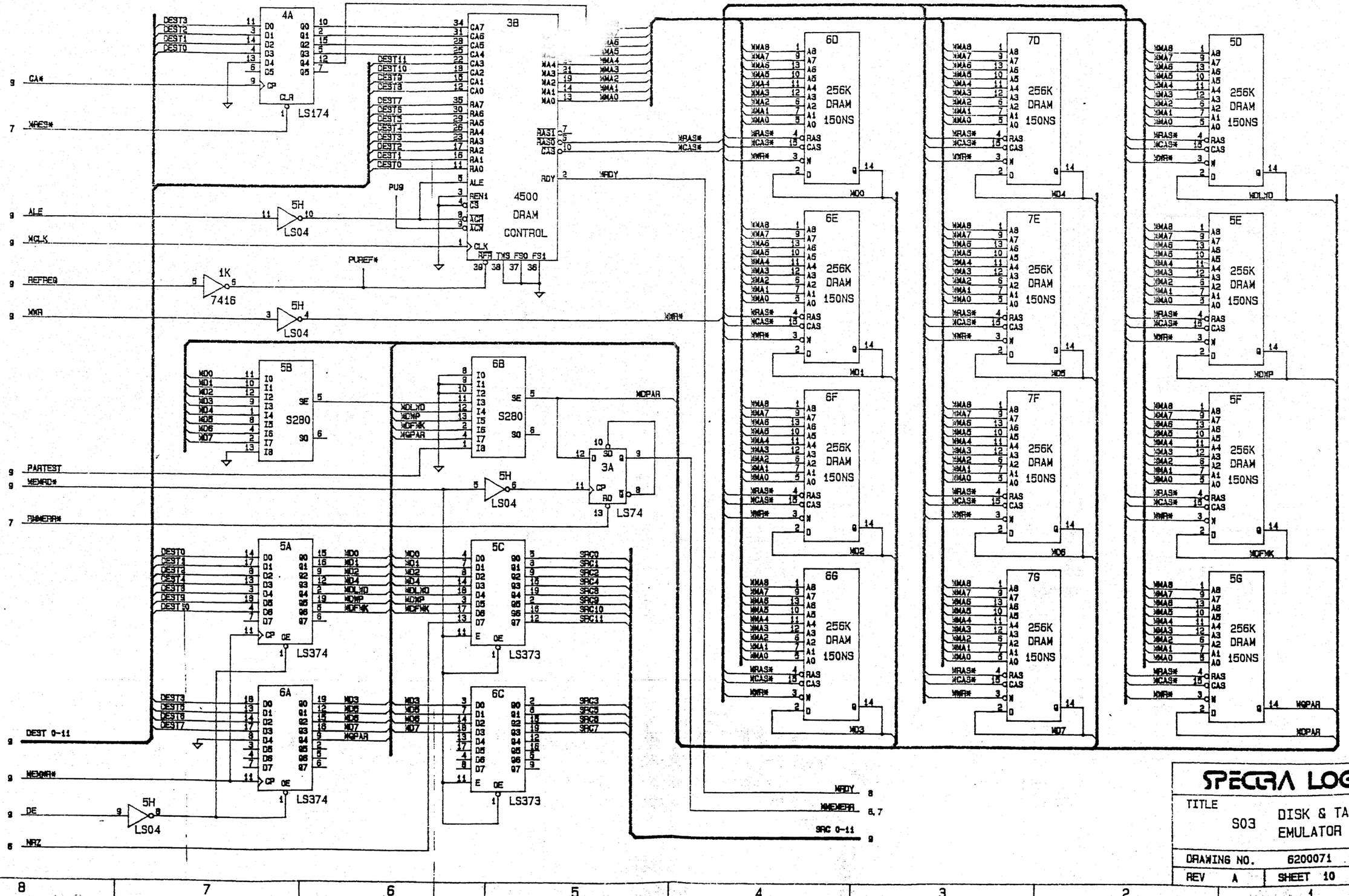
4A
LS174
3B
4500
DRAM
CONTROL
5H
LS04
1K
7416
6D
6E
6F
66
7D
7E
7F
76
5D
5E
5F
5G
256K
DRAM
150NS
5B
6B
S280
3A
LS74
5A
5C
6A
6C
LS374
LS373
CA*
XRES*
ALE
MCLK
REFREQ
XWR
PUP
PUREF*
PARTEST
MEMRD*
MEMWR*
DE
NRZ
DEST 0-11
XRAS*
XCAS*
XWR*
MRDY
MMEMERR
SRC 0-11
MDPAR
SPECTRA LOGIC
TITLE
S03 DISK & TAPE EMULATOR
DRAWING NO. 6200071
REV A
SHEET 10 OF 10